■ Photo may include optional equipment

We build a better future

HYUNDAI LPG FORKLIFT TRUCKS - Applied Tier 4 Engine

35L/40L/45L/50L-7A

HYUNDAI
HEAVY INDUSTRIES EUROPE

NEW criterion
of Forklift Trucks

Hyundai introduces with its 7A-series a new line of LPG forklift trucks. Excellent power and performance improves your business profitability.

OPSS (Operator Presence Sensing System)

No mast or drive movement is possible when the operator is not seated in normal position.

■ Photo may include optional equipment

The new master on your job-site!

Smooth running, efficient and ergonomically designed, 35L/40L/45L/50-7A series are made to meet your needs.

Powerful Engine

GM 4.3L V6 Engine

Market approved quality of GM 4.3L V6 engine ensures incomparable performance, durability and additional value to the machine. Powerful and efficient engine provides excellent fuel consumption and exellent torque improved operator's comfort. (EPA/CARB Tier-IV Certified)

70 kW / 2,300 rpm

Fast and stable performance

Being able to quickly raise and lower the mast, as well as tilting forward and backward, the truck provides you the best operational conditions during loading/unloading operations. When the truck is fully loaded, mast lowering speed is carefully controlled to ensure safety by the down control valve.

■ Photo may include optional equipment

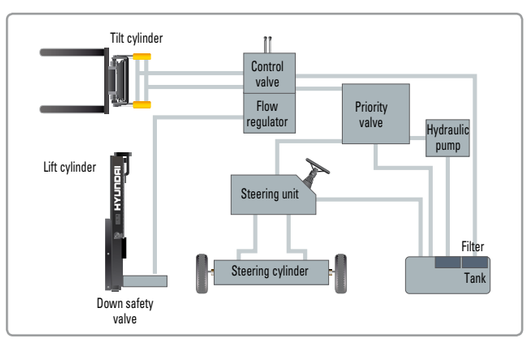

State-of-the-art hydraulic system

The latest designed, large-capacity hydraulic system including a low-noise control valve shortens reaction time during operation and improves both efficiency and durability.

Fully hydrostatic power steering

A hydraulic steering system always guarantees smooth and flexible steering, preventing overrun and steering wheel kick-back.

Increased mast tilting angle

A mast tilting angle of 8 degrees forward and 10 degrees backward gives the operator a safe and rapid platform for loading and unloading jobs.

Faster Travel Speed & Grade-ability

The powerful high-output engine provides greater acceleration, better grade-ability and faster travel speed on any tough terrain or slope.

Grade-ability (Loaded)

35L-7A : 40.5%
40L-7A : 36.2%
45L-7A : 31.6%
50L-7A : 28.7%

Travel speed (Unloaded)

35L-7A : 23.8 km/h
40L-7A : 22.9 km/h
45L-7A : 22.9 km/h
50L-7A : 22.8 km/h

Ergonomic operator friendly compartment design!

A design based on human engineering relieves fatigue and increases operator's efficiency.

Operator friendly gauges and water-resistant monitor panel

❶ Parking brake lamp
❷ Directional indicators
❸ Engine oil warning lamp
❹ Transmission oil temperature warning lamp
❺ Battery charging warning lamp
❻ Air cleaner filter warning light
❼ Working light indicator
❽ Seat belt warning
❾ Water temperature gauge
❿ OPSS warning (option)
⓫ Hour meter
⓬ Engine check lamp

Easily adjustable suspension seat

An attractive and adjustable seat with armrests, based on a human engineering design, provides great comfort, safety and durability.

High visibility for safe operation

The operator is able to work with increased safety and accuracy due to a wider view mast.

■ Photo may include optional equipment

Ergonomic positioned pedals

Based on human engineering, the accelerator, brake and inching pedals are optimally positioned for operator's convenience.

Cup holder & console box

Additional storage spaces are located inside the operating space for operator's convenience.

Quick Response of Operating Control Levers

Only minimal operator's effort is required for precise, safe and productive control.

Adjustable steering wheel

Steering wheel with horn button can be adjusted by a lever on the right-hand side for the most comfortable operator position.

Easy and safe shift lever

A single lever on the left side of the steering column gives the operator fast and easy control of speed and travel direction. The engine can only be started in case of neutral position of this lever.

Multi-function switch lever

A multi-functional switch lever gives easy access to lights and horn.

Enhanced safety through high durability!

Safety and durability are priorities in the design of the equipment.

Strong overhead guard

The safety overhead guard meets ISO6005 regulations and protects the operator during hazardous jobs.

Parking Brake

Toggle type parking brake requires less efforts from the operator to set.

Highly durable split type drive axle

The planetary reduction drive axle smoothly delivers desired torque to the drive wheels.

■ Photo may include optional equipment

Large footstep & Handle

Wide "open"step ensures easy and safe access to the operator's seat

Expansion bellows

The expansion bellows absorbs vibration and reduces noise generated from the exhaust gas system to extend the life span.

Electrically Monitored Air Filter

An air cleaner sensor alerts the operator of a restricted air filter so allowing replacement before a potential engine damage occurs.

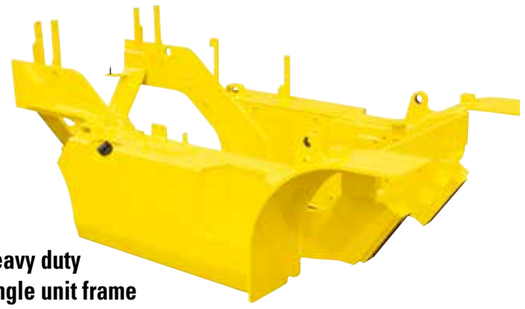

Heavy duty single unit frame

Heavy duty single unit type frame, designed on the basis of accurate structural analysis, guarantees durability and safety.

Bright, protected headlights

Bright, protected headlights are positioned for increased visibility in dark environments.

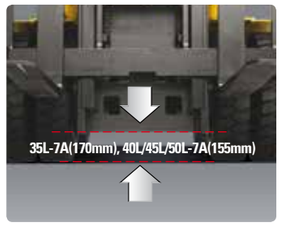

Ground clearance

The engine and transmission are assembled horizontally and positioned high in the frame to protect valuable components during operations on rugged surface.

Centralized design for easy service!

An ideal arrangement of components ensures easy acces and convenience during maintenance.

Easy change air cleaner

The air filter is readily accessible for cleaning or replacement. (6inch Cyclone Type)

Fast Service Access for Daily Fluids Check

Maintenance Free Battery

Aluminum radiator with superb protection against heat

Removable Side Panels for Ease of Service

Improvement in Maintenance of Electric Parts

Various electric parts are centralized in dash board resulting in effortless troubleshooting.

Easy Maintenance oil check

The T/M oil level can be checked easily without any disassembly.

Brake fluid reservoir

Highly visible and accessible reservoir makes daily inspections a quick and easy job.

An accessible, compact fuse box for easy inspection

Mast Specifications

Mast Type		Maximum Fork Height mm		Overall Height (Lowered) mm		Free Lift (mm)				Tilt Angle degree	Load Capacity without Side Shift 600mm LC (kg)								Load Capacity with Side Shift 600mm LC (kg)								Truck Weight Unload (kg)							
				Single Tire	Double Tire	With Backrest		Without Backrest			Single Tire				Double Tire				Single Tire				Double Tire				Single Tire				Double Tire			
		35L/40L 45L-7A	50L-7A	35L/40L 45L/50L-7A	35L/40L 45L/50L-7A	35L/40L 45L-7A	50L-7A	35L/40L 45L-7A	50L-7A	For-ward / Back ward	35L-7A	40L-7A	45L-7A	50L-7A	35L-7A	40L-7A	45L-7A	50L-7A	35L-7A	40L-7A	45L-7A	50L-7A	35L-7A	40L-7A	45L-7A	50L-7A	35L-7A	40L-7A	45L-7A	50L-7A	35L-7A	40L-7A	45L-7A	50L-7A
2/ Stage limited free lift	V270	2720	2630	2085	2070	120	120	120	120	8/10	3500	4000	4500	5000	3500	4000	4500	5000	3500	4000	4500	5000	3500	4000	4500	5000	5563	6027	6440	6906	5718	6133	6549	7018
	*V300	3020	2930	2235	2220	120	120	120	120	8/10	3500	4000	4500	5000	3500	4000	4500	5000	3500	4000	4500	4950	3500	4000	4500	4950	5593	6057	6470	6931	5748	6163	6597	7043
	V330	3320	3230	2385	2370	120	120	120	120	8/10	3500	4000	4500	5000	3500	4000	4500	5000	3500	4000	4450	4850	3500	4000	4450	4850	5631	6095	6508	6956	5.786	6201	6617	7068
	V350	3520	3430	2535	2520	120	120	120	120	8/10	3500	4000	4500	5000	3500	4000	4500	5000	3450	3950	4400	4800	3450	3950	4400	4800	5654	6118	6531	6981	5809	6224	6640	7093
	V370	3720	3630	2635	2620	120	120	120	120	8/10	3500	4000	4500	5000	3500	4000	4500	5000	3400	3900	4350	4750	3400	3900	4300	4750	5674	6138	6551	6998	5829	6244	6660	7109
	V400	4020	3930	2845	2830	120	120	120	120	8/10	3500	4000	4500	4900	3500	4000	4500	5000	3350	3800	4250	4650	3350	3800	4250	4650	5717	6181	6594	7033	5871	6287	6702	7145
	V450	4520	4430	3095	3080	120	120	120	120	8/6	3450	3900	4350	4750	3450	3950	4350	4800	3250	3700	4100	4450	3250	3700	4100	4500	5829	6293	6706	7136	5984	6399	6815	7248
	V500	5020	4930	3345	3330	120	120	120	120	8/6	3350	3750	4200	4600	3350	3850	4250	4650	3150	3550	4000	4300	3150	3600	3950	4350	5880	6344	6757	7178	6035	6450	6866	7290
2/Stage full free lift	VF280	2805	2697	2135	2120	1258	905	919	1223	8/8	3500	4000	4500	5000	3500	4000	4500	5000	3500	4000	4500	5000	3500	4000	4500	5000	5604	6068	6476	6924	5756	6171	6585	7036
	VF300	3005	2897	2235	2220	1358	1005	1019	1323	8/8	3500	4000	4500	5000	3500	4000	4500	5000	3500	4000	4500	4950	3500	4000	4500	4950	5630	6094	6502	6949	5782	6197	6611	7061
	VF315	3155	3047	2325	2310	1448	1095	1109	1413	8/8	3500	4000	4500	5000	3500	4000	4500	5000	3450	4000	4500	4900	3500	4000	4450	4900	5650	6114	6502	6967	5802	6216	6630	7079
3/ Stage full free lift	TF370	3730	3672	2035	2020	812	807	1139	1074	8/8	3500	4000	4500	5000	3500	4000	4500	5000	3300	3850	4250	4700	3350	3850	4250	4650	5820	6284	6697	7108	5975	6355	6808	7212
	TF400	4030	3972	2135	2120	912	907	1239	1174	8/8	3450	4000	4450	4900	3500	4000	4450	4900	3250	3750	4200	4600	3300	3750	4150	4600	5950	6314	6727	7134	6005	6385	6838	7238
	TF430	4330	4272	2235	2220	1012	1007	1339	1274	8/8	3400	3900	4350	4800	3450	3950	4350	4800	3150	3700	4100	4500	3200	3700	4100	4500	5881	6345	6758	7159	6036	6416	6869	7263
	TF450	4510	4452	2295	2290	1072	1067	1399	1334	8/8	3350	3900	4300	4750	3400	3950	4300	4750	3150	3700	4050	4450	3200	3700	4050	4450	5900	6364	6777	7176	6055	6435	6888	7279
	TF470	4720	4662	2385	2390	1162	1157	1489	1424	8/8	3300	3850	4250	4650	3350	3900	4250	4700	3100	3600	4000	4400	3150	3650	4000	4400	5936	6400	6813	7199	6091	6471	6925	7303
	TF500	5020	4962	2485	2470	1262	1257	1589	1524	8/6	3250	3750	4150	4600	3300	3750	4200	4600	3050	3500	3900	4350	3100	3550	3900	4350	5960	6423	6836	7224	6114	6494	6948	7328
	TF550	5520	5462	2665	2650	1442	1437	1769	1704	8/6	3100	3600	4000	4450	3250	3650	4050	4500	2750	3350	3650	4200	3000	3450	3800	4200	6021	6485	6898	7276	6175	6555	7009	7380
	TF600	6030	5972	2845	2830	1622	1617	1949	1884	8/6	2600	3050	3300	4150	3100	3500	3900	4350	2450	2900	3100	3950	2900	3300	3650	4100	6089	6553	6966	7317	6244	6624	7077	7420

* standard

Load Capacity

35L-7A

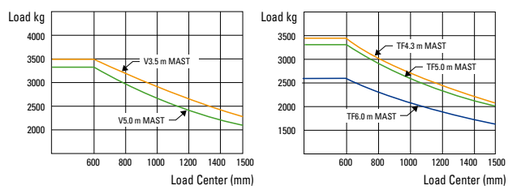

40L-7A

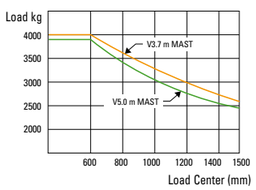

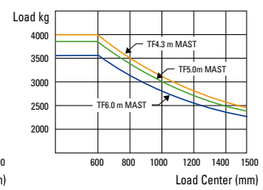

45L-7A

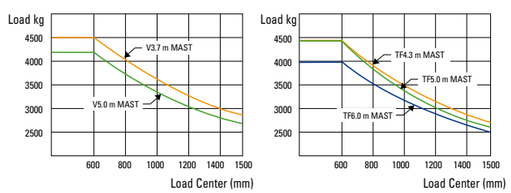

50L-7A

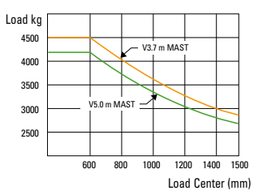

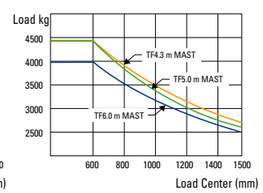

Optional Items

- **CABIN**
- **SIDE SHIFT**
- **INTEGRAL FORK POSITIONER**
- **FORK**
  35L/40L-7A : 1220, 1370, 1520, 1670, 1820, 1970 mm
  45L/50L-7A : 1070, 1370, 1520, 1670, 1820, 1970 mm
- **OPPS (TRAVEL / TRAVEL + MAST)**
- **OVER SHOE :** 71 in, 79 in, 87 in
- **TILTING :** 8/6°; 8/8°
- **TIRE :** CUSHION, NO-MARKING, DOUBLE
- **SEAT :** POCKET, ARM REST, HIP REST
- **LPG CLAMP :** SWING OUT
- **M.C.V :** 4-SPOOL
- **ATTACH PIPING :** 3 SPOOL-PIPING, 4 SPOOL-PIPING
- **MASTER SWITCH**
- **BEACON LAMP**
- **HAZARD SWITCH**
- **WORK LAMP**
- **BRAKE PEDAL**
  Hydraulic Booster (without Accumulator)

Dimensions

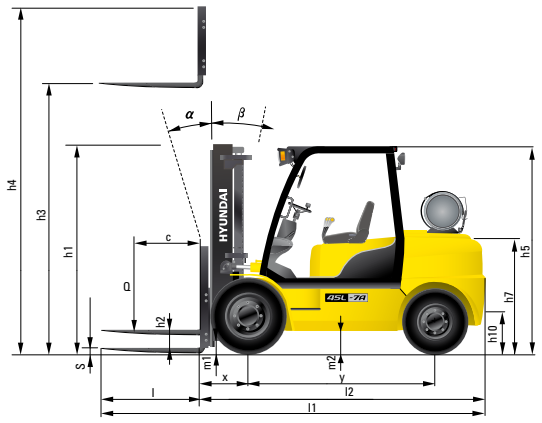

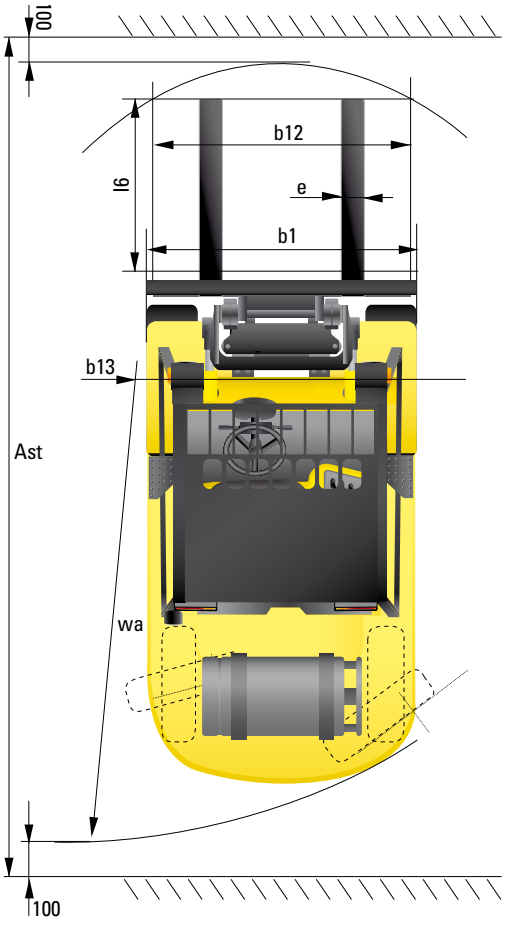

Specifications

Identification						
1.1	Manufacturer		Hyundai	Hyundai	Hyundai	Hyundai
1.2	Type		35L-7A	40L-7A	45L-7A	50L-7A
1.3	Drive: Electric, Diesel, LPG Gas		LPG	LPG	LPG	LPG
1.4	Type of operation: hand, pedestrian, standing, seated, order-picker		seated	seated	seated	seated
1.5	Load capacity (standard)	Q (t)	3,5	4,0	4,5	5,0
1.6	Load center distance	c (mm)	600	600	600	600
1.8	Load distance, center of drive axle to forks	x (mm)	561	561	561	576
1.9	Wheelbase	y (mm)	2000	2000	2000	2000
Weights						
2.1	Service weight	kg	5748	6163	6579	7043
2.2	Axle loading, loaded front / rear	kg	8330 / 918	9094 / 1069	9891 / 1188	9926 / 1617
2.3	Axle loading, unloaded front / rear	kg	2798 / 2950	2772 / 3391	2779 / 3800	2814 / 4229
Wheels, chassis						
3.1	Tires: solid rubber, superelastic, pneumatic, polyurethane		Pneumatic / Solid rubber	Pneumatic / Solid rubber	Pneumatic / Solid rubber	Pneumatic / Solid rubber
3.2	Tires size, front		8.25 - 15 - 14PR	300 - 15 - 18PR	300 - 15 - 18PR	300 - 15 - 18PR
3.3	Tires size, rear		7.00 - 12 - 12PR	7.00 - 12 - 12PR	7.00 - 12 - 12PR	7.00 - 12 - 12PR
3.5	Wheels, number front / rear (X= driven wheels) (single tire / double tires)		(2x / 2) / (4x / 2)	(2x / 2) / (4x / 2)	(2x / 2) / (4x / 2)	(2x / 2) / (4x / 2)
3.6	Track width, front (single tire / double tires)	b10 (mm)	(1162 / 1312)	(1150 / 1312)	(1150 / 1312)	(1150 / 1312)
3.7	Track width, rear	b11 (mm)	1140	1140	1140	1140
Basic dimensions						
4.1	Mast / fork carriage tilt forward / backward	degrees	8 / 10	8 / 10	8 / 10	8 / 10
4.2	Lowered mast height (standard)	h1 (mm)	2235	2220	2220	2220
4.3	Free lift	h2 (mm)	120	120	120	120
4.4	Lift height (standard)	h3 (mm)	3020	3020	3020	2930
4.5	Extended mast height (standard)	h4 (mm)	4224	4224	4235	4147
4.7	Overhead load guard (cab) height	h5 (mm)	2240	2240	2240	2240
4.8	Seat height / standing height	h7 (mm)	1100	1100	1100	1100
4.12	Coupling height	h10 (mm)	385	385	385	385
4.19	Overall length	l1 (mm)	4145	4205	4405	4435
4.20	Length to face of forks	l2 (mm)	3075	3135	3185	3235
4.21	Overall width (single tire / double tires)	b1 (mm)	(1400 / 1776)	(1448 / 1776)	(1448 / 1776)	(1448 / 1776)
4.22	Fork dimensions L x W x T	l / e / s (mm)	50 x 122 x 1070	50 x 150 x 1070	50 x 150 x 1220	60 x 150 x 1200
4.23	Fork carriage type		III / A	III / A	IV / A	IV / A
4.24	Fork carriage width	b12 (mm)	1300	1600	1600	1600
4.31	Ground clearance, loaded, under mast	m1 (mm)	170	155	155	155
4.32	Ground clearance, centre of wheelbase	m2 (mm)	200	200	200	200
4.33	Aisle width for pallets 1000 x 1200 crossways (L x W)	Ast (mm)	4567	4620	4666	4708
4.34	Aisle width for pallets 800 x 1200 lengthways (W x L)	Ast (mm)	4767	4820	4866	4908
4.35	Turning radius	Wa (mm)	2806	2859	2905	2947
4.36	Smallest pivot point distance	b13 (mm)	1009	1009	1009	1009
Performance data						
5.1	Travel speed, unloaded	km/h	23.8	22.9	22.9	22.8
5.2	Lift speed, loaded / unloaded	mm/s	510 / 530	510 / 530	510 / 530	440 / 460
5.3	Lowering speed, loaded / unloaded	mm/s	500 / 450	500 / 450	500 / 450	500 / 450
5.5	Drawbar pull, loaded	kg	4002	4065	3930	3911
5.7	Gradient performance, loaded / unloaded	%	40.5	36.2	31.6	28.7
5.9	Acceleration time, loaded / unloaded (10m)	sec	-	-	-	-
5.10	Service brake		Hydraulic	Hydraulic	Hydraulic	Hydraulic
Engine						
6.1	Engine manufacturer / type		GM 4.3L	GM 4.3L	GM 4.3L	GM 4.3L
6.2	Engine power acc. To ISO 1585	kW	70	70	70	70
6.3	Rated speed	1/min	2300	2300	2300	2300
6.4	No. of cylinder / cubic capacity	/cm³	6 / 4294	6 / 4294	6 / 4294	6 / 4294
6.5	Fuel consumption acc. to VDI cycle	ℓ/h	-	-	-	-
Other details						
8.1	Type of drive control		Power shift	Power shift	Power shift	Power shift
8.2	Operating pressure (attachments)	bar	225 / 168	225 / 168	225 / 168	225 / 168
8.3	Hydraulic oil flow (attachments)	ℓ/min	30	30	30	30
8.4	Sound level at driver's ear according to DIN 12053	db(A)	80	80	80	80

* Standard and optional equipment may vary. Contact your Hyundai dealer for more information. The machine may vary according to International standards.
* The photos may include attachments and optional equipment that are not available in your area.
* Materials and specifications are subject to change without advance notice.
* All imperial measurements rounded off to the nearest pound or inch.

HYUNDAI
HEAVY INDUSTRIES EUROPE
CONSTRUCTION EQUIPMENT

PLEASE CONTACT

Hyundai Construction Equipment Europe nv
Hyundailaan 4, 3980 Tessenderlo, Belgium **Tel:** (32) 14-56-2200 **Fax:** (32) 14-59-3405